Stainless steel perforated tray

Equipped troughs accessories

Code: 8151 003

DETAILS

Equipped troughs accessories	Stainless steel compartment with three containers
Material	Stainless steel
Texture	Brushed in line
Finish	Foster brushed
Type	Standard
Dimensions	28 x 14 cm
Length	2 unit - Standard
Notes:	Removable containers

Key to understanding the accessories

The lengths of the channels and accessories are indicated in “units”; for the composition, the sum of the “units” of the accessories must be the same as the length in “units” of the channel.

TECHNICAL DATA
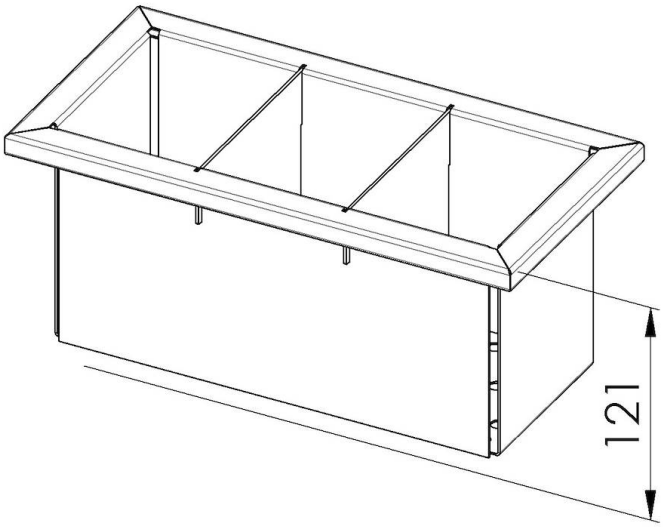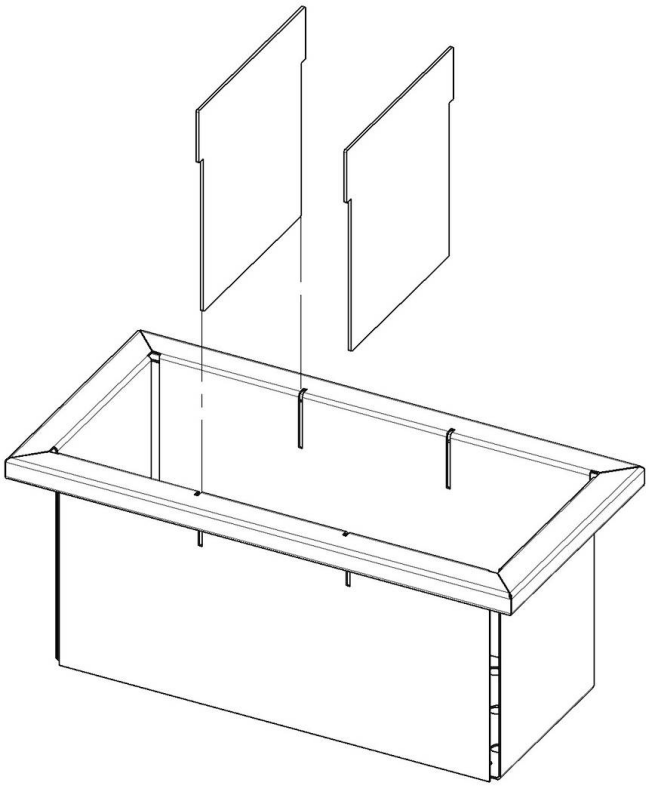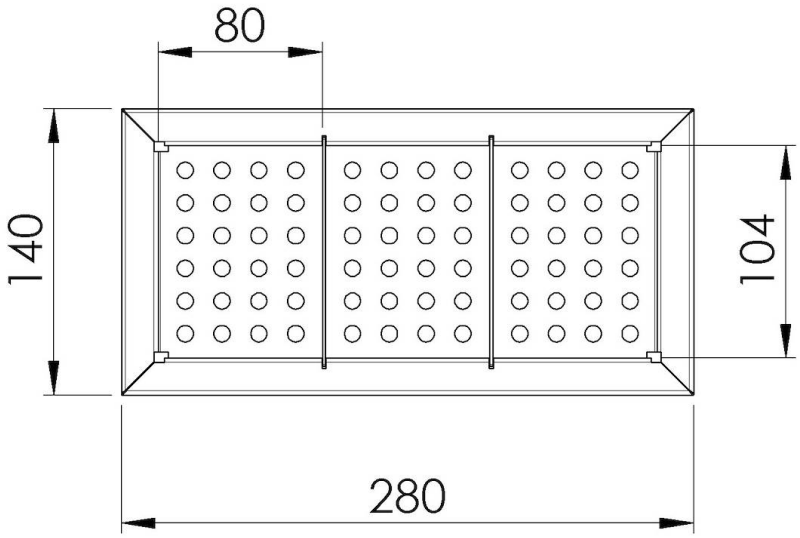
8151 003